www.growcel.com

RTG Design

The purpose of a grow light is to turn electricity into electromagnetic radiation in the form of light needed for plant growth efficiently as possible. Common lighting devices (including other LED lights) emit a wide range of radiation, including heat, often not needed for the intended purpose, illumination; and this energy is often pulsed at a high rate so it appears to be consistently on to the human eye but causing a drop in needed luminance at a specific wavelength and over a finite amount of time and space in relation to power consumption. Furthermore the heat generated is often removed by a fan or other method leading to more power use and heat generation.

Cool and efficient light providing consistent, constant, controlled, wavelength specific and directional illumination. The cool efficient light (CEL for short) emits the wanted wavelengths of light directionally while dissipating the heat through the reflector. The light output can be smooth and not pulsed leading to a higher ratio of light over time. Choosing the right emitters for the intended use it is possible to emit wanted wavelengths of light in the wanted place with minimal extra radiation such as heat or UV rays.

WARNING PLEASE READ
Use at own risk.
Even though all the light emitted from CEL is safe do not stare directly into the light.

QUICKSTART GUIDE

1. Remove all packing materials and visually inspect the CEL for any damage such as broken or frayed wires, dents, or any shipping damage. If the unit is damaged call tech support immediately.

2. Check that the supplied electricity matches the fixture rating , power up the CEL and check that all the LEDs are lit.

3. Position the CEL no more than five (5) feet away from what you want to grow. If the CEL is too close to the plant the LEDs will bleach spots on the plant. Experiment to find what works best for your particular situation. CEL will work in any orientation.

4. Maintain air temperature between 60 and 80 degrees for optimal growth. CEL reaches peak performance during this temperature range.

5. A timer is recommended to limit light exposure to 18 hours a day for vegetative growth cycle and 12 hours a day to simulate fall for blooming to take place in plants that are sensitive to a photo period.

WARRANTY

1 year parts and 10 year labor.
Guaranteed to grow if used properly.

INSTRUCTIONS

After you decide on the layout of your space and the positioning of your CEL you will need to devote most of your attention to the immediate growing environment. CEL is designed to capitalize on the natural relationship between humans and plants. If you are comfortable in the growing environment then your plants will be comfortable in the environment given the right amount of light. Pay attention to the directions on the products you use in your grow. Keep in mind plants need light, water, food, and air to grow. The purest ph balanced water available should be used in your grow. Fans are not necessary to cool the lights but they do help strengthen the stems and ruffle the leaves allowing light to penetrate deeper into the foliage. Try to keep the grow environment as natural as possible. Do not enclose your space unless it is necessary. The more space a plant has to grow the more it will flourish. Simpler is better, especially if it is your first attempt to grow under artificial light. Always design your grow for the end result. Count on your plants growing into the environment rather than filling up your space immediately.

Tech Specifications

Cool and efficient light providing consistent, constant, controlled, wavelength specific and directional illumination.

The present invention relates to a Cool and efficient light providing consistent, constant, controlled, wavelength specific and directional illumination. The cool efficient light (CEL for short) emits the wanted wavelengths of light directionally while dissipating the heat through the reflector. The light output can be smooth and not pulsed leading to a higher ratio of light over time. Choosing the right emitters for the intended use it is possible to emit wanted wavelengths of light in the wanted place with minimal extra radiation such as heat or UV rays.
The device is comprised of the following:
A. Wavelength specific emitter
B. Heat sink and reflector
C. Direct current power source
D. Load resistor OR current limiting device
E. Frame
F. Cool Efficient Light
G. Electrical conductor
The Cool Efficient Light (F) device is an electric device that emits desired wavelengths of energy including but not limited to visible light, such as a lighting fixture or light, and may be anywhere from very small, or terribly large.

The wavelength specific emitter (A) is an electronic device emitting specific wavelength(s) radiation including but not limited to visible light. The emitter (A) could include future yet to be invented or conceived emitters and current emitters such as but not limited to LED, light emitting diodes, and other devices that emit specific wavelength(s). The emitter (A) will emit its energy when some electricity is applied.
The heat sink and reflector (B) provides adequate heat dissipation for emitter function while reflecting usable energy in the desired direction. The heat sink and reflector (B) can be constructed of any materiel that provides enough heat dissipation for the emitter to operate including but not limited to aluminum. A polished surface is recommended to reflect as much energy as possible. The heat sink and reflector (B) can be constructed out of multiple pieces or out of one piece but should be assembled with an appropriate thermal compound or something in way to ensure proper thermal conductivity.
A more complex load resistor or current limiting device (D) may be used in order to control the release of energy. Smaller and more efficient components could allow for a smaller more streamlined frame (E). The direct current power source (C) and the load resistor or current limiting device (D) could be integrated as one unit. An onboard control computer could be added to control modulation of different emitters on the same light or to control the light over time. Furthermore lights could be controlled from a central device. Multiple emitters could also be used. Emitters that have multiple colors on the same device could also be used. The cool efficient light (F) drawn has three heat sink and reflectors (B) but the cool efficient light (F) can have any number of any size heat sink and reflector(s). The frame (E) can be adjusted to any size or shape. Multiple emitters (A) can be attached to the heat sink reflector (B). Different or multiple direct current power sources (C) can be used. The load resistor or current limiting device (D) is connected between the wavelength specific emitter (A) and the direct current power source (C) to control the amount of electricity in the emitter (A).

Wavelength specific emitter(s) (A) can be place on the heat sink reflector (B) so the desired output is directed forward while the heat generated by the emitter(s) is dissipated by the heat sink reflector (B). The heat sink reflector(s) (B) with attached wavelength specific emitter(s) (A) can be fastened to the frame (E) along with the direct current power source(s) (C) and the load resistor(s) or current limiting device(s). Conductor(s) (G) connect the direct current power source(s) (C) to the wavelength specific emitter(s) (A) through the load resistor(s) or current limiting device(s) (D). All the components do not need to be connected to the frame or to each other in order to function as long as they are connected via the conductors (G). The direct current power supply(s) (C) and load resistor(s) or current limiting device(s) (D) could be in a separate frame (E) than the heat sink and reflector(s) and wavelength specific emitter(s) (A) as long as they are connected with conductor(s) (G).
The direct current power source (C) supplies electricity through the load resistor or current limiting device (D) to the wavelength specific emitter (A) that is attached to the heat sink reflector (B) and energy is emitted out of the wavelength specific emitter (A). The heat generated by the wavelength specific emitter (A) is dissipated by the heat sink and reflector (B) while the specific

wavelengths produced are also directed by reflection.
When the direct current power supply (C) is connected to the wavelength specific emitter (A) and the load resistor or current limiting device (D) via the conductor (G) the electricity causes the wavelength specific emitter (A) to emit light that is reflected and heat that is dissipated through the heat sink and reflector (B).
Attach the wavelength specific emitter(s) (A) to the heat sink and reflector (B) in a way that ensures good thermal conductivity between devices. The heat sink and reflector should be made from a materiel that can dissipate enough heat from the wavelength specific emitter(s) (A) and reflect any usable energy in the desired direction. The wavelength specific emitter(s) (A) should be chosen for the required output and an appropriate load resistor or current limiting device (D) is placed in line with the direct current power source (C) and the wavelength specific emitter (A). The conductor (G) should be of sufficient size or capacity to safely conduct the electricity between the components. The direct current power source (C) should be rated to handle the load with proper safety factor. The components should be connected in accordance with manufactures specifications.
The direct current power source (C) and load resistor or current limiting device (D) can be combined. The direct current power source (C) and/or load resistor or current limiting device (D) can be moved to a separate unit. Additional devices can attach to the heat sink and reflector (B) to increase thermal mass such as but not limited to a water cooling system or fans. A switch or switches may be added for control.
The cool efficient light (F) works as long as the direct current power source (C) is supplying electricity. The cool efficient light (F) is used where efficiency is needed as well as wavelength specific output. The cool efficient light (F) can be used for any lighting application.
The cool efficient light (F) can be used for but not limited to fish tanks, horticulture, plant growth, live entertainment, still photography, desk lamps, photo therapy, human cell repair, concerts, film, TV, buildings, eco-friendly lighting, mobile homes, cars, military, parties, corporate events, landscape lighting, marine lighting, and space exploration.
Current lighting methods, including the sun, radiate a broad assortment of different wavelengths across the electromagnetic spectrum and extending into and in some cases past the infrared and ultraviolet spectrum. Humans, animals and plants do not need this entire spectrum to live and grow and furthermore certain wavelengths can be harmful to life. Current lighting fixtures can be wavelength specific but often the wrong wavelength is used or there is not enough of the needed wavelengths proportionally to the unneeded wavelengths such as heat. Also current makers of lighting fixtures often use modulation to drive the illuminator electronically. My light converts energy into the needed direct current to drive the emitter and therefore there is no pulse or strobe in the light output unless a modulator is introduced for that purpose.

RTG eco CEL BY RICHARD TYLER GREENE Jr
Ready To Grow Cool Efficient Light

RTG eco CEL

RTG eco CEL Designed by Richard Tyler Greene Jr. Assembled and tested in Los Angeles, CA 2010

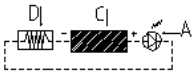

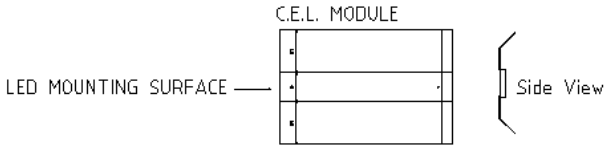

RTG CEL

BASIC ELECTRICAL HOOKUP DUPLICATE PER SYSTEM FOLLOW MANUFACTURES SPEC PER LED

Richard Tyler Greene Jr. Lighting Designer www.RICHARDTYLERGREENE.com www.GrowCEL.com

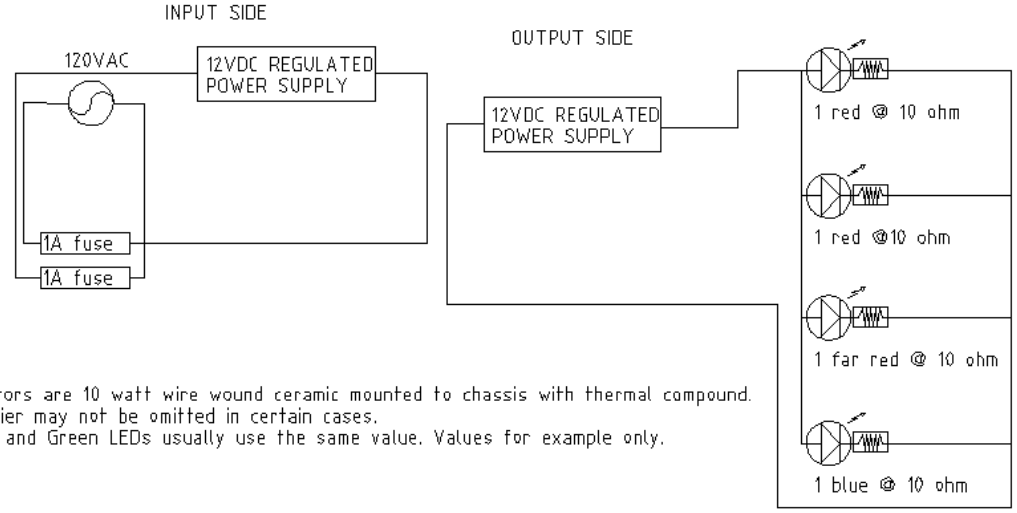

Resistors are 10 watt wire wound ceramic mounted to chassis with thermal compound.
Rectifier may not be omitted in certain cases.
Blue and Green LEDs usually use the same value. Values for example only.

RTG 3 CEL BY RICHARD TYLER GREENE Jr
Ready To Grow Cool Efficient Light

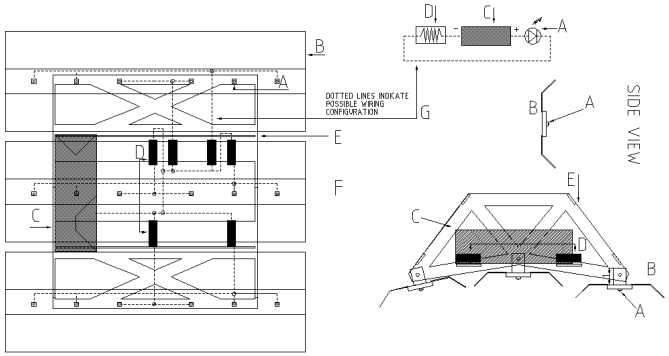

RTG 3 CEL

Ready To Grow Cool Efficient Light Designed by Richard Tyler Greene Jr. Assembled and tested in Los Angeles, CA 2007

C.E.L. FRAME ASSEMBLY TOP VIEW

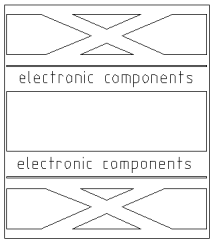

C.E.L. FRAME ASSEMBLY SIDE VIEW

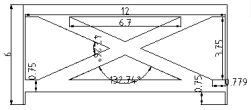

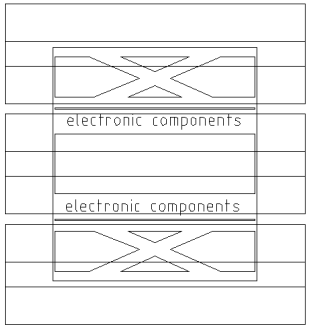

C.E.L. COMPLETE

C.E.L. MODULE

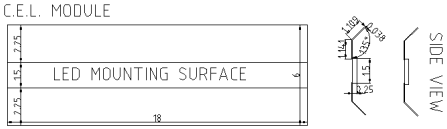

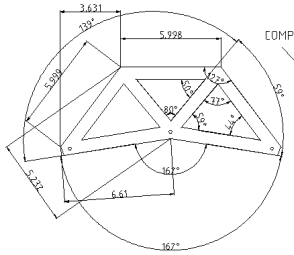

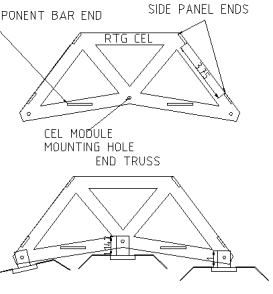

C.E.L. FRAME ASSEMBLY END VIEW

Richard Tyler Greene Jr. Lighting Designer www.RICHARDTYLERGREENE.com www.GrowCEL.com

BASIC ELECTRICAL HOOKUP DUPLICATE PER SYSTEM FOLLOW MANUFACTURES SPEC PER LED

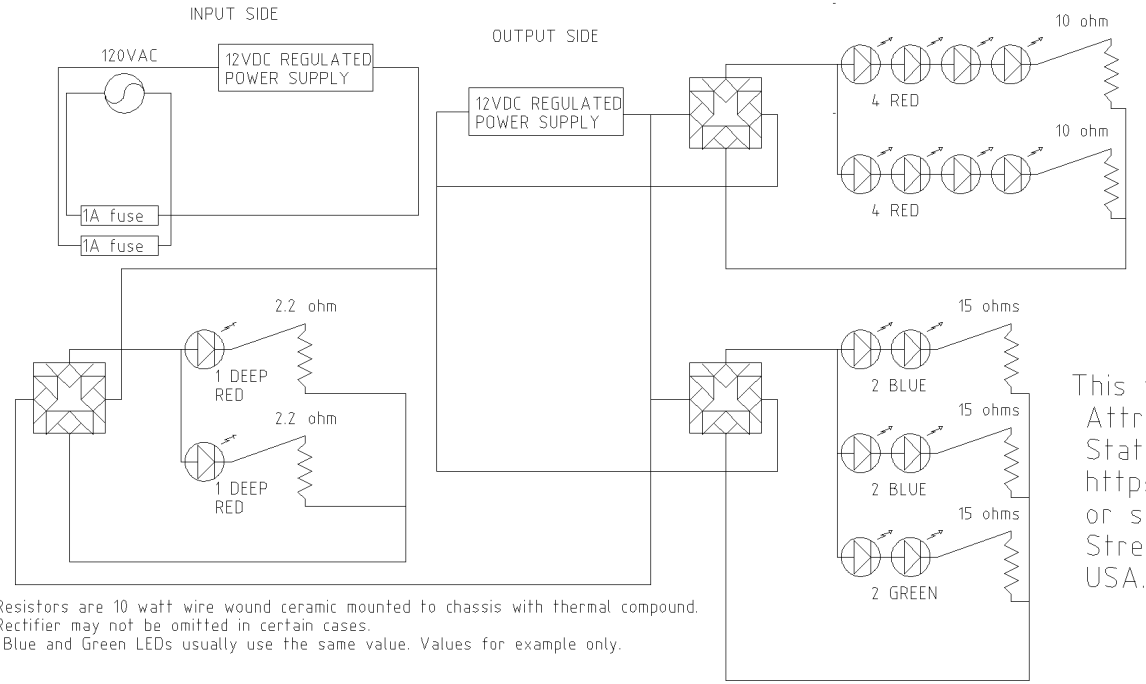

Resistors are 10 watt wire wound ceramic mounted to chassis with thermal compound.
Rectifier may not be omitted in certain cases.
Blue and Green LEDs usually use the same value. Values for example only.

RTG CEL

1.

Common lighting devices emit a wide range of radiation, including heat, often not needed for the intended purpose, illumination; and this energy is often pulsed at a high rate so it appears to be consistently on to the human eye but causing a drop in needed luminance at a specific wavelength and over a finite amount of time and space in relation to power consumption. Furthermore the heat generated is often removed by a fan or other method leading to more power use and heat generation.

www.growcel.com